TINKER CAD ASSIGNMENT

VIJAYARAGAVAN R

23BTT044

DJ LIGHT:

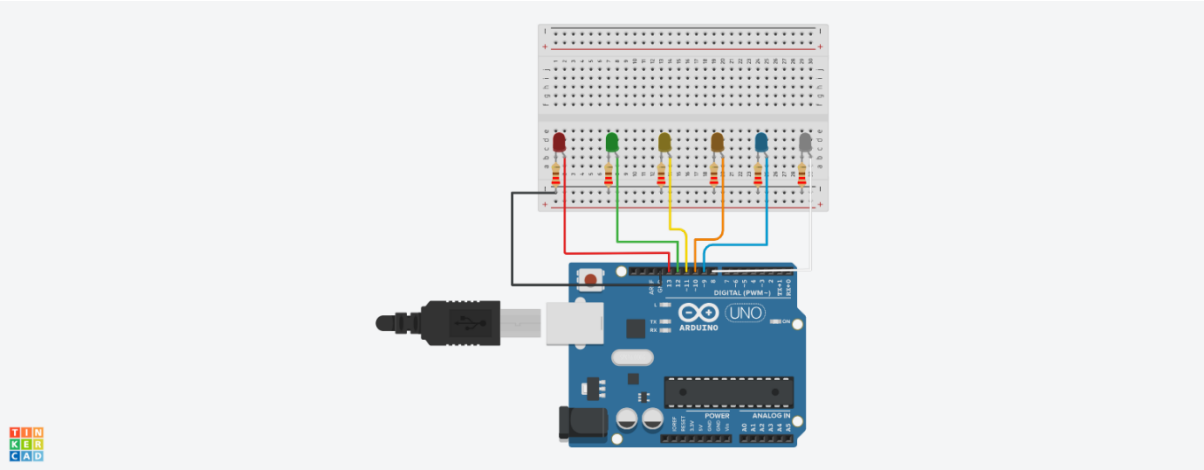

Component List

Download CSV

Name	Quantity	Component
U1	1	Arduino Uno R3
D1	1	Red LED
D2	1	Green LED
D3	1	Yellow LED
D4	1	Orange LED
D5	1	Blue LED
D6	1	White LED
R1 R2 R3 R6 R7 R8	6	220 Ω Resistor

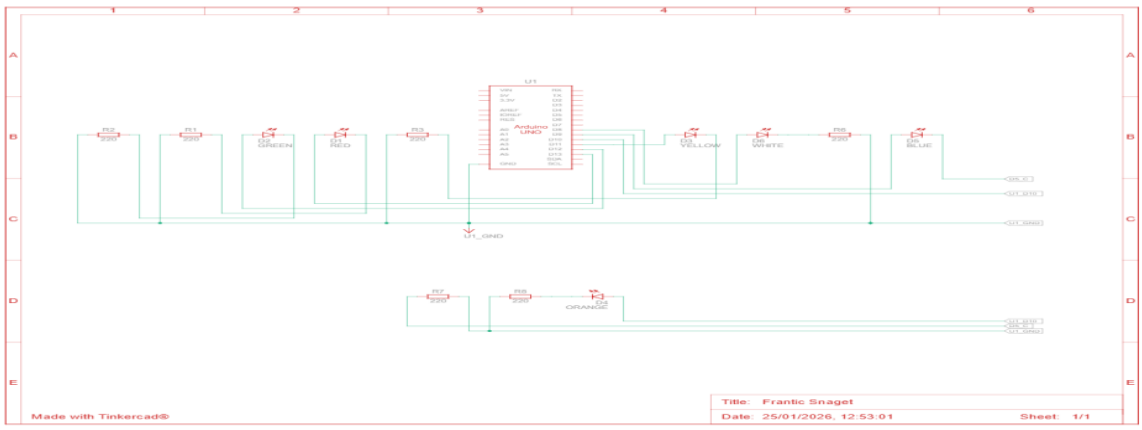

1 Arduino Uno R3 (Microcontroller Board)

- What it is
  - Arduino Uno R3 is a microcontroller development board based on ATmega328P.
  - It acts as the brain of the circuit.
- Why it is used
  - To control LEDs by sending HIGH/LOW signals.
  - To execute the program (sketch) written by the user.
  - To provide 5V power and digital control pins.
- Example
  - When pin D8 goes HIGH, the red LED turns ON.
  - When it goes LOW, the LED turns OFF.
- Key role in this circuit
  - Controls which LED glows and when.
  - Sends safe logic-level signals (5V).
- 5 Applications

1. Traffic light control systems
2. Home automation (lights, fans)
3. Robotics control unit

4. Sensor-based monitoring systems
5. Educational electronics & prototyping

---

2 LEDs (Red, Green, Yellow, Orange, Blue, White)

- What they are
  - Light Emitting Diodes that emit light when current flows in one direction.
- Why they are used
  - To give visual output of Arduino signals.
  - To show status, indication, or alerts.
- Example
  - Green LED → system ON
  - Red LED → error or stop
  - Yellow LED → warning or delay
- Key role in this circuit
  - Each LED represents a different output state from Arduino pins.
- 5 Applications

1. Indicator lights in electronic devices
2. Traffic signals

3. Decorative lighting
4. Status indicators in machines
5. Display panels and signboards

3️⃣ 220 Ω Resistors

- What they are
  - Passive components that limit current flow.
- Why they are used
  - LEDs draw more current than they can handle.
  - Resistors protect LEDs from burning.
- Example
  - Without a resistor → LED burns instantly
  - With 220 Ω resistor → safe current (~20 mA)
- Key role in this circuit
  - Ensures safe operation of each LED.
  - Prevents damage to Arduino output pins.
- 5 Applications

1. Current limiting in LED circuits
2. Voltage divider networks
3. Pull-up and pull-down resistors

4. Signal conditioning
5. Protection circuits

---

4 Breadboard

- What it is
  - A temporary circuit-building platform without soldering.
- Why it is used
  - To connect LEDs and resistors neatly.
  - Allows easy modification and testing.
- Example
  - LED anode connected to resistor
  - Resistor connected to Arduino pin through breadboard tracks
- Key role in this circuit
  - Holds LEDs and resistors securely.
  - Provides common power and ground rails.
- 5 Applications

1. Prototyping electronic circuits
2. Educational lab experiments

3. Testing components before soldering
4. Arduino project development
5. Temporary circuit demonstrations

---

5 Jumper Wires (Connecting Wires)

- What they are
  - Insulated wires used to connect components electrically.
- Why they are used
  - To transfer signals between Arduino and LEDs.
  - To connect power and ground.
- Example
  - Jumper wire connects Arduino pin D9 to LED resistor.
- Key role in this circuit
  - Forms the signal path from Arduino to LEDs.
  - Enables flexible circuit layout.
- 5 Applications

1. Arduino and Raspberry Pi projects
2. Breadboard interconnections

3. Signal routing in prototypes
4. Sensor connections
5. Rapid circuit testing

---

6 USB Cable / Power Supply

- What it is
  - Supplies 5V power and enables program upload.
- Why it is used
  - Arduino requires power to run.
  - USB allows code upload from computer.
- Example
  - Laptop USB → Arduino → LEDs glow
- Key role in this circuit
  - Powers the Arduino and entire circuit.
  - Acts as communication link.
- 5 Applications

1. Powering development boards
2. Programming microcontrollers
3. Serial communication
4. Debugging embedded systems

5. Portable power source

🔁 OVERALL WORKING (ONE-LINE)

Arduino sends digital signals → resistors limit current → LEDs glow safely on the breadboard.